VACUUM FLUORESCENT DISPLAY MODULE

SPECIFICATION

MODEL : CU20026SCPB-S20A

CUSTOMER : _____

SPECIFICATION NO.	:T-CU20026SCPB-S20A-R1
ISSUE DATE	:July 24,1987
NO. OF PRESENTATION	:
REVISION	:Feb.19,1988

RECEIVED
MAR 1 2 1990

PUBLISHED BY: ISE ELECTRONICS CORPORATION
JAPAN

1.0 General Description

1.1 Application : Readout of computer, micro-computer, communication terminal and automatic instruments.

1.2 Construction : Single board display module consists of 40 character VFD, refresh memory, character generator, control circuit and DC/DC converter.

1.3 Display color : Blue-green.

1.4 Outline dimension : See attached drawings.

2.0 Absolute Maximum Ratings

Power Supply Voltage ----- V_{CC} : +7.0 Max. V_{DC}
Logic Input Voltage ----- V_{IN} : +7.0 Max. V_{DC}

3.0 Electrical Ratings

Parameter	Symbol	Min.	Typ.	Max.	Unit.
Power supply voltage	V_{CC}	4.75	5.00	5.25	V_{DC}

4.0 Electrical Characteristics

PARAMETER		SYMBOL	MIN	TYP	MAX	UNIT	COND
INPUT VOLTAGE	H	V_{IH}	2.2	-	Vcc	V_{DC}	Vcc=5.0V
	L	V_{IL}	-	-	0.8	V_{DC}	Vcc=5.0V
OUTPUT VOLTAGE	H	V_{OH}	2.4	-	-	V_{DC}	I_{OH}=-400 μA
	L	V_{OL}	-	-	0.45	V_{DC}	I_{OL}=1.6mA
SUPPLY CURRENT		Icc	-	0.3	0.4	A	Vcc=5.0V Operate all dots in all chr positions

Note:
Power-on delay of Vcc shall be within 30 ms.
Icc might be anticipated more than 2 times figure of above table at power on rush.

5.0 Optical Specifications

Number of characters	: 40(2 line x 20 chrs)
Matrix format	: 5 x 7 dot character with cursor
Display area	: 108.2 mm x 16 mm(X x Y)
Character size	: 3.3 mm x 5.05 mm(X x Y)
Character pich	: 5.1 mm(center-to-center)
Dot size	: 0.5 mm x 0.55 mm(X x Y)
Dot pitch	: 0.7 mm x 0.75 mm(X x Y)
Luminance	: 200 fL(Typ.)
Color of illumination	: Blue-green

6.0 Environmental Specifications

Operating temperature	: -20 to +80°C
Storage temperature	: -40 to +70°C
Operating humidity	: 20 to 80 % R.H

7.0 Mechanical Strength

Vibration Test	:	Frequency	: 10-55-10 HZ
		Sweep time	: 1 minute
		Amplitude	: 2 mm (Fixed 10G)
		Direction	: X,Y & Z (3 directions)
		Times	: 30 Min. for each direction
Shock Test	:	Acceleration	: 100G
		Duration	: 9.0 msec
		Direction	: X,Y & Z (3 directions)
		Times	: Three (3) times for each direction

The test shall be done at no operating and no any mechanical and electrical failures should be found after the tests.

8.0 Functional Descriptions

The CU20026SCPB-S20A VFD Module will provide the functions of DATA WRITE, COMMAND WRITE, STATUS READ and DISPLAY RESET.

$\overline{WR}$	$\overline{RD}$	A0	$\overline{CS}$	FUNCTION	DIRECTION OF DATA BUS
0→1	1	0	0	DATA WRITE	HOST TO MODULE
0→1	1	1	0	COMMAND WRITE	HOST TO MODULE
1	0	1	0	STATUS READ	MODULE TO HOST

8.1 Data write.

8.1.1 Data write is executed at rising edge of $\overline{WR}$ pulse while $\overline{CS}$-A0="0" and $\overline{RD}$="1". This module accepts 158 ASCII characters and 16 control codes listed in Table 1. Five desired fonts may be alternated into character code of 00 Hex to FF Hex in Table 1 with ESC(1B Hex) code. See(16) ESC.
Generally, the cursor automatically moves to right by one character position after execution of data write.

Control code are defined as follows:
(The term of "CURSOR" means the writing position.)

1) BS: Back Space

DC1 Mode: The cursor position is shifted to the left by one character position. When the cursor is located at the left end of the bottom line, the cursor is shifted to the right most position of the top-line after execution.
When the cursor is in the left most position of the top line, the cursor is shifted to the right most position of the bottom line.
DC2 Mode: Same as DC1 Mode.

2) HT: Horisontal Tab

DC1 Mode: The cursor position is shifted to right by one character position. When the cursor is located at the right end of the top line, the cursor is shifted to the left most position of the bottom line.
When the cursor is on the right most position of bottom line, the cursor is shifted to the left most position of the top line.
DC2 Mode: When the cursor is on the right most position of the bottom line, all characters on the bottom line are shifted to one line up, and cursor is positioned to the left most position of the bottom line. At this time, all positions of the bottom line are cleared for a new line.

3) LF: Line Feed

DC1 Mode: The cursor is shifted to the same column position of next line. When the cursor is on the bottom line, the cursor is shifted to the same column position of the top line.
DC2 Mode: When the cursor is on the bottom line, all characters on the bottom line are shifted to the upper line, and the cursor maintains the same position of the bottom line. At this time, all-positions of the bottom line are cleared for a new line. When the cursor is on the top line, same as DC1 Mode execution will be made.

4) CR: Carriage Return

DC1 Mode: The cursor is positioned on the left most position of the same line.
DC2 Mode: Same as DC1 Mode.

5) DC1: Normal Mode (Default Mode)

After a character is written, the position of the cursor is automatically shifted to the right by one character position. When the cursor is on the right most position of the top line, the cursor is shifted to the left most position of the bottom line. When the cursor is on the right most position of the bottom line, the cursor is shifted to the left most position of the top line.

6) DC2: Scroll Mode

After all positions of the bottom line are written, the characters written on the bottom line are scrolled up to the top line, and the cursor is positioned at the left most position of the bottom line.
At this time, all characters on the bottom line are cleared for a new line.
The display module automatically selects the DC1 Mode above at initial power-on time. This selection will be maintained another mode will be selected.

7) DC3: Cursor On Mode (Default Mode)

The cursor position is displayed as an under-line.

8) DC4: Block Cursor Mode

The character on cursor position is alternatively flickering with full dots.

9) DC5: Cursor Off Mode

The under-line on cursor position is becoming invisible and DC4,DC6 Mode are cancelled.

10) DC6: Cursor Blink Mode

The under-line on cursor position is flickering.

The following five control codes select the font as follows:

11) SUB: English font (USA ASCII-7) (Default Code)

12) FS : Danish font (ECMA-7)

13) GS : General European font (ECMA-7)

14) RS : Swedish font (ECMA-7)

15) US : German font (ECMA-7)

Conversion table from ASCII to BCHA is shown as follows:

HEX CODE	CONVERSION CODES				
	1A	1C	1D	1E	1F
23	#	£	£	£	£
5B	[	Ä	[	Ä	Ä
5C	\	Ö	\	Ö	Ö
5D	]	Å	]	Å	]
5E	^	^	^	Ü	Ü
7B	{	ä	{	ä	ä
7C	|	ö	|	ö	ö
7D	}	å	}	å	ü
7E	~	~	~	ü	ß
	ASCII	DANISH	GEN EUROPE	SWEDISH	GERMAN

SUB(1A Hex), English font, is automatically selected at the power-on or reset. The selected mode is maintained unless other mode is selected.

16) ESC: The following ESC code assigns five user desired fonts.(UDF) into any character positions from 00 Hex to FF Hex of table 1. RAM of the module reserves five-character-size of memory for these new characters,

Six-byte data succeeding this ESC code alternates present character font to new font desired.

1st byte : 1B Hex

2nd byte : Definition character code
Definable character codes are available from 00 Hex to FF Hex of table 1. If the character code of control characters as BS,HT, CR,etc,is selected for new character, the module displays new character instead of control action. Caution that definition of 1B Hex(ESC) character code kills ESC function thereafter.

3rd--7th byte : Formation of character font
Each dot data of 5 x 7 is defined with following Table. Figures in the Table are correspond to each dot position of 5 x 7. The dots to be lighted shall be specified as "1" (active high).

BYTE	D7	D6	D5	D4	D3	D2	D1	D0
3rd	22	4	21	3	20	2	19	1
4th	UL	8	25	7	24	6	23	5
5th	29	12	28	11	27	10	26	9
6th	33	16	32	15	31	14	30	13
7th	*	*	*	*	35	18	34	17

*="0" (low) UL:Under line

After execution of above sequence, new character defined will be displayed by defined character code.

DISPLAY DOT

1	2	3	4	5
6	7	8	9	10
11	12	13	14	15
16	17	18	19	20
21	22	23	24	25
26	27	28	29	30
31	32	33	34	35

5 X 7 DOT

Example:

Definition of new character "!" to character code A0 Hex

Dot pattern

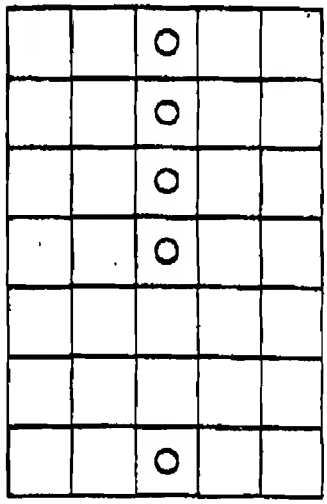

5 X 7 Dot

Specify each dot

Byte/Bit	7	6	5	4	3	2	1	0	HEX
3rd Byte	0	0	0	1	0	0	0	0	10
4th Byte	0	1	0	0	0	0	0	0	40
5th Byte	0	0	0	0	0	0	0	0	00
6th Byte	1	0	0	0	0	0	0	1	81
7th Byte	0	0	0	0	0	1	0	0	04

Then Syntax should be written: 1B + A0 + 10 + 40 + 00 + 81 + 04 (Hex)

8.2 Command Write

Command write is executed at rising edge of $\overline{WR}$ pulse while $\overline{CS}$="0" and A0=$\overline{RD}$="1". This module provides following commands:

0XXX XXXX: Set the cursor on 0XX XXXX(Hex) position.
0000 0000 (00 Hex) : The left most of the top line
0000 0001 (01 Hex) : The 2nd column of the top line
0001 0011 (13 Hex) : The right most of the top line
0001 0100 (14 Hex) : The left most of the bottom line
0010 0111 (27 Hex) : The right most of the bottom line
When more than the number of characters(40) is specified, the cursor will not move.

0100 0000: (40 Hex) Software reset
Same execution as hardware reset of 8.4

8.3 Status Read

The module outputs the status on bit 1 of data bus, when $\overline{CS}$=$\overline{RD}$="0" and A0=$\overline{WR}$="1".
BIT 0: Do not care
BIT 1: Status of data write: data write and command write are valid only when BIT 1="0".
BIT 2 through 7: Do not care.

No confirming of status bits, however, is needed, only when the period of write cycle is longer than 1.0 ms.

8.4 Hardware Reset

RESET="1" Makes the module initialized as follows:

1. All character positions are filled with SP(20 Hex) characters.
2. The cursor position is set on the left most position of the top line.
3. DC1 and DC3 modes are selected.
4. Alternated characters specified by ESC code are cancelled, and standard characters in character generator are selected.

Reset signal is active high and shall be maintained 50 ms or longer. No instruction is executed within 100 ms after reset pulse or reset command. (SEE TIMING CHART)

8.5 Test Mode

"0" more than 100msec to the TO line at the power on or reset may initiate the test mode. During the test mode, no any data/commands are acceptable. The test mode can be cancelled only power off or reset at open of TO line. All stored ROM character fonts are displayed automatically at this mode.

CHARACTER FONTS

D7 D6 D5 D4	0 0 0 0	0 0 0 1	0 0 1 0	0 0 1 1	0 1 0 0	0 1 0 1	0 1 1 0	0 1 1 1	1 0 0 0	1 0 0 1	1 0 1 0	1 0 1 1	1 1 0 0	1 1 0 1	1 1 1 0	1 1 1 1
D3 D2 D1 D0	0	1	2	3	4	5	6	7	8	9	A	B	C	D	E	F
0 0 0 0	0		SP	0	@	P	`	p								
0 0 0 1	1	DC1	!	1	A	Q	a	q								
0 0 1 0	2	DC2	"	2	B	R	b	r								
0 0 1 1	3	DC3	#	3	C	S	c	s								
0 1 0 0	4	DC4	$	4	D	T	d	t								
0 1 0 1	5	DC5	%	5	E	U	e	u								
0 1 1 0	6	DC6	&	6	F	V	f	v								
0 1 1 1	7		'	7	G	W	g	w								
1 0 0 0	8	BS	(	8	H	X	h	x								
1 0 0 1	9	HT	)	9	I	Y	i	y								
1 0 1 0	A	LF	SUB	:	J	Z	j	z								
1 0 1 1	B		ESC	;	K	[	k	{								
1 1 0 0	C		FS	<	L	\	l	|							
1 1 0 1	D	CR	GS	=	M	]	m	}								
1 1 1 0	E		RS	>	N	^	n	~								
1 1 1 1	F		US	?	O	_	o									

Table 1

9.0 Interface Example

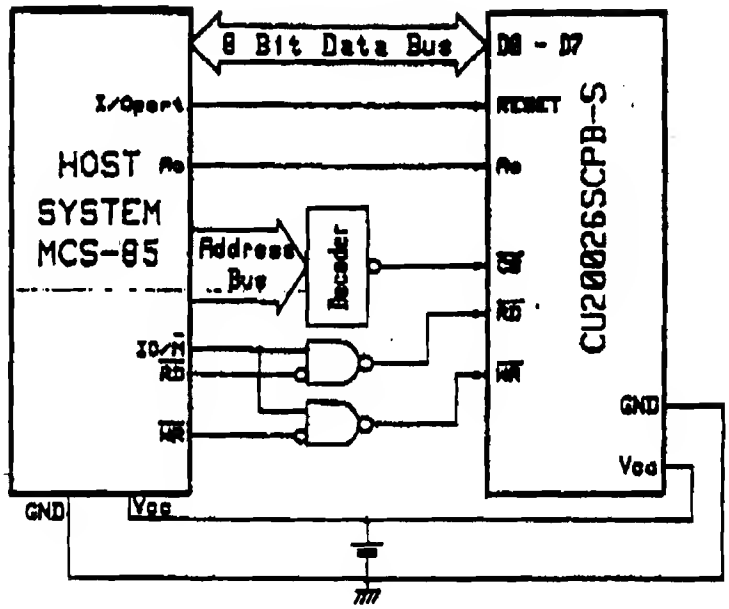

10.0 Data Write / Read Timing

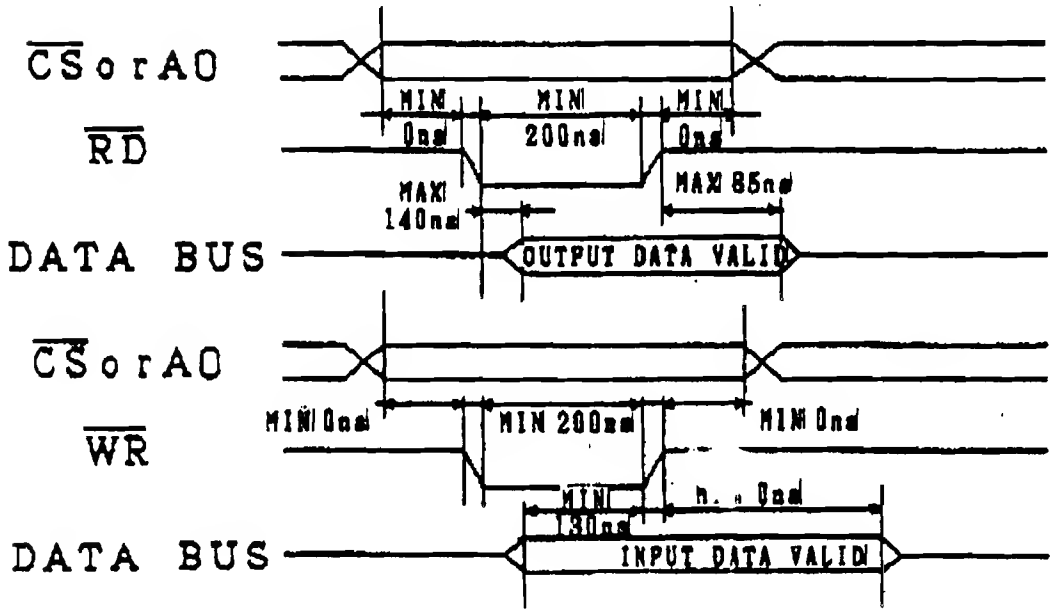

11.0 Reset Timing

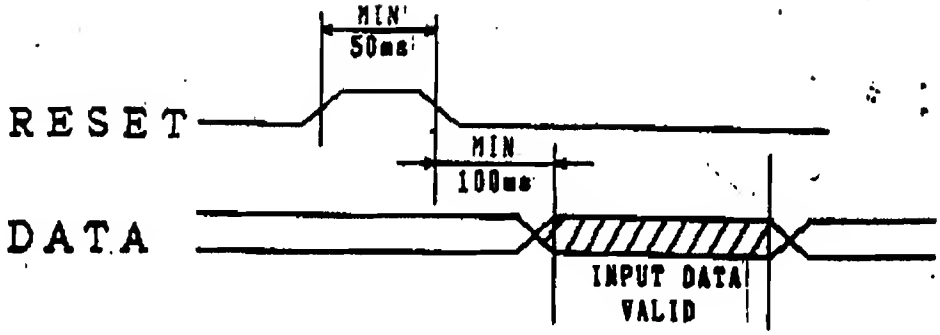

12.0 Pin Connection

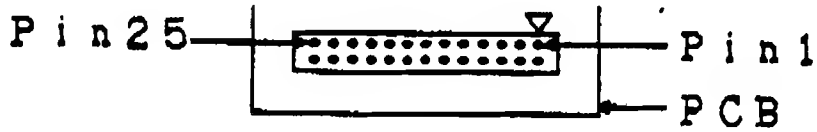

PIN NO.	SIGNAL
1	D7
3	D6
5	D5
7	D4
9	D3
11	D2
13	D1
15	D0
17	$\overline{WR}$
19	A0
21	$\overline{RD}$
23	$\overline{CS}$
25	T0

PIN NO.	SIGNAL
2	GND
4	GND
6	GND
8	GND
10	GND
12	GND
14	GND
16	GND
18	GND
20	RESET
22	GND
24	GND
26	GND

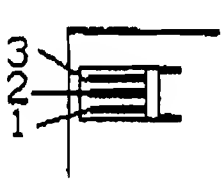

1 : Vcc
2 : NC
3 : GND

13.0 Outline Dimension

CU20026SCPB-S20 OUTLINE DIMENSION

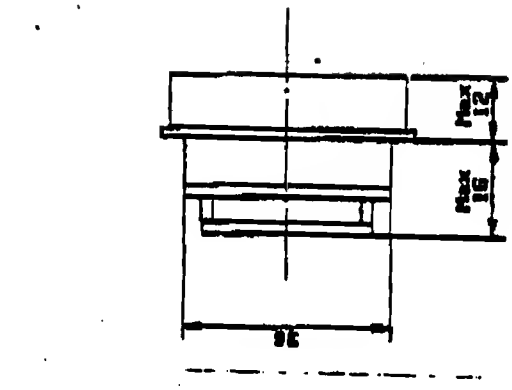

Attached Accessory:
Power Connector AMP 171822-3

Optional Accessory:
Signal Connector Receptacle
with 20 cm Cable
Order_NO. FSC-2641-020

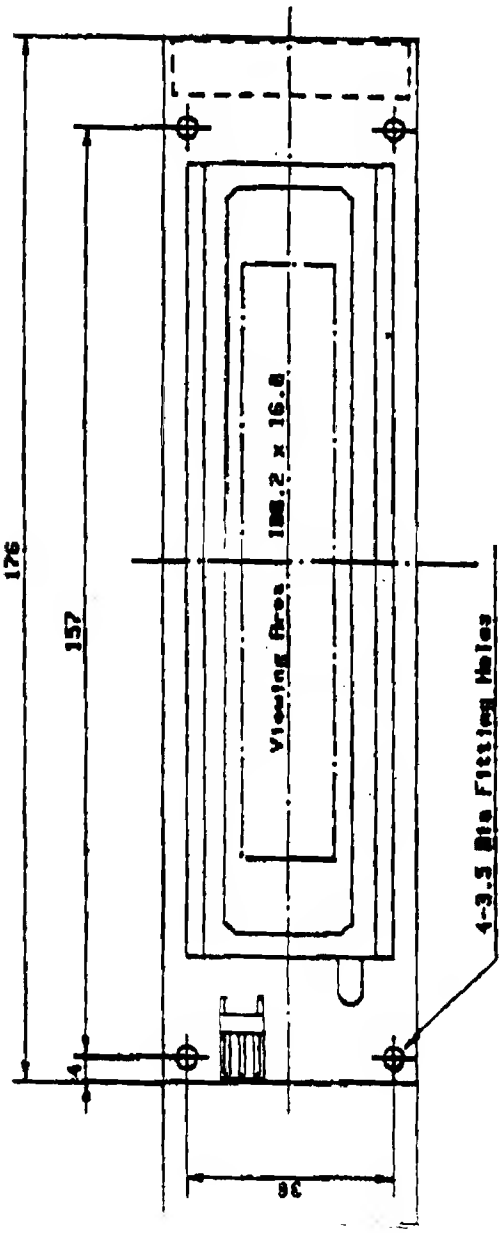

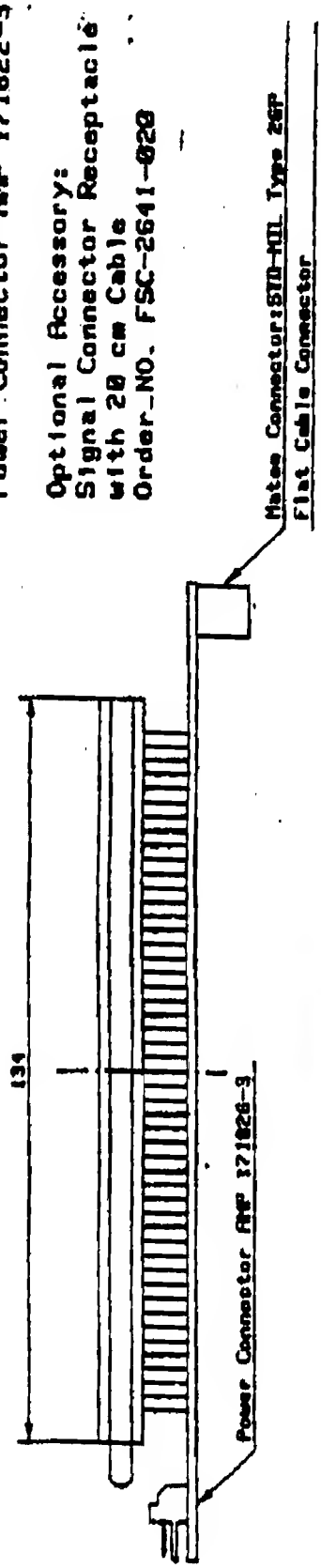

IMPORTANT PRECAUTIONS

- All VFD Modules contain MOS LSIs or ICs. Anti-Static handling procedures are always required.

- VF Display consists of Soda-lime glass. Heavy shock more than 100 G, thermal shock greater than 10 ℃/minute, direct hit with hard material to the glass surface -- especially to the EXHAUST PIPE -- may CRACK the glass.

- Do not PUSH the display strongly. At mounting to the system frame, slight gap between display glass face and front panel is necessary to avoid a contact failure of lead pins of display. Twist or warp mounting will make a glass CRACK around the lead pin of display.

- Neither DATA CONNECTOR or POWER CONNECTOR should be connect or disconnect while power is applied.
  As is often the case with most subsystems, caution should be exercised in selectively disconnecting power within a computer based system. The modules receive high logic on strobe lines as random signals on all data ports. Removal of primary power with logic signals applied may damage input circuitry.

- Stresses more than specification listed under the Absolute Maximum Ratings may cause PARMANENT DAMAGE of the modules.

- +5 volts power line must be regulated completely since all control logics are depended on this line.
  Do not apply slow-start power. Provide sufficient output current power source to avoid trouble of RUSH CURRENT at power on. (At least output current of double figure of Icc, listed on the specification of each modules, is required.)

- Data cable length between module and host system is recommended within 200 mm to free from a mis-operation caused by noise.

- Do not place the module on the conductive plate just after the power off
  Due to big capacitors on the module, more than 1 min. of discharging time is required to avoid the failure caused by shorting of power line.